Current part is item (5,6) on diagram. Available at www.oshkoshequipment.com

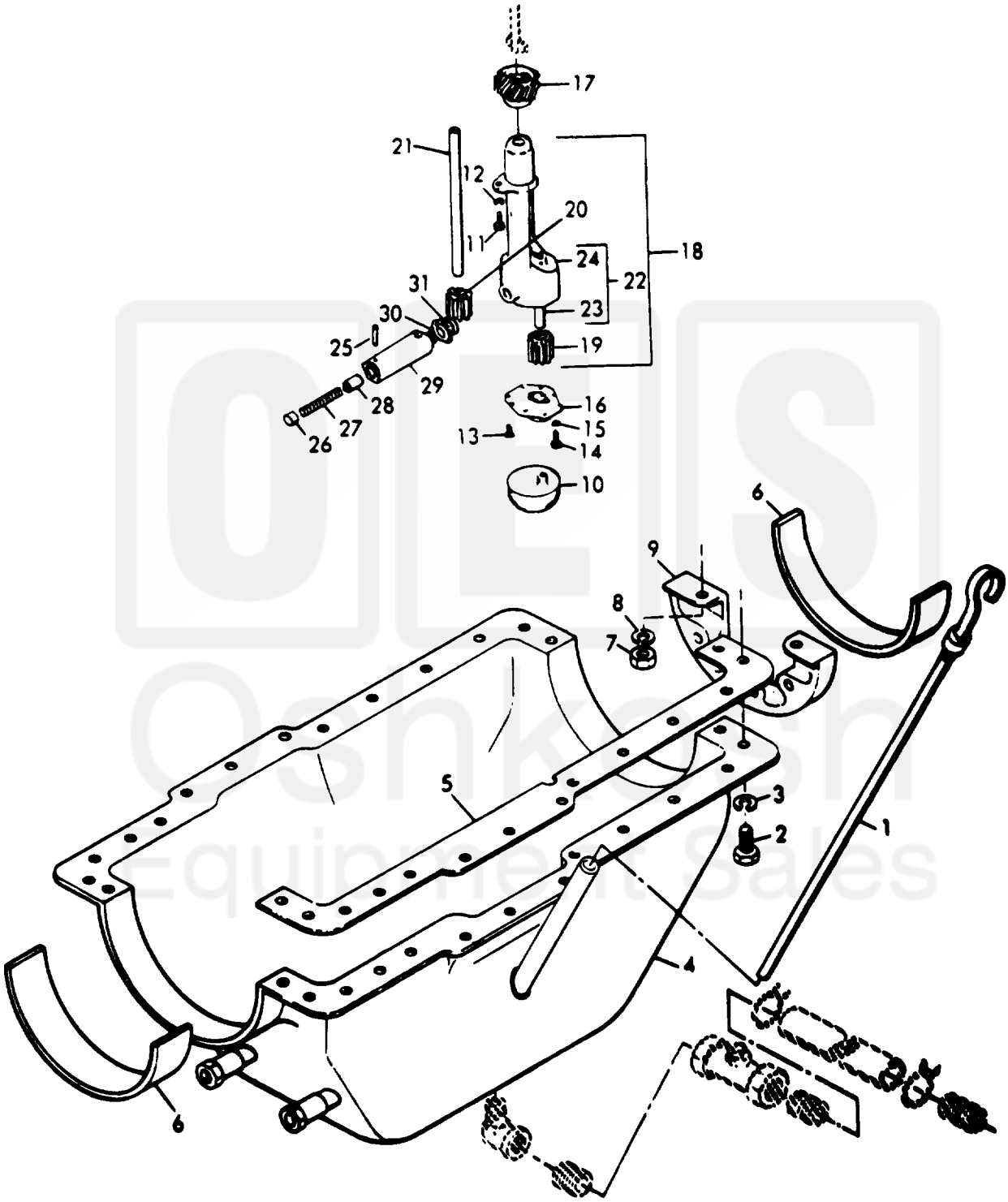

Figure 77. Oil Pan and Oil Pump

Current part is item (5,6) on diagram. Available at www.oshkoshequipment.com

Current part is item (5,6) on diagram. Available at www.oshkoshequipment.com

(1) ILLUSTRATION A FIG. NO.	B ITEM NO.	(2) SMR CODE A ARMY	B AIR FORCE	C NAVY	D USMC	(3) A SSI	B REPL FACTOR	(4) NATIONAL STOCK NUMBER	(5) DESCRIPTION REF NUMBER & MFR CODE	USABLE ON CODE	(6) U/M	(7) QTY INC IN UNITS	(8) USMC QTY PER EQUIP
77	1	PAOZZ	PAOZZ	PAOZZ		D	.010	6680-00-198-7058	DIP STICK, OIL LEVEL 260269B 28265		EA	1	
77	2	PAFZZ	PAOZZ	PAGZZ		D	.008	5305-00-269-3209	SCREW, CAP, HEXAGON 4585A 28265		EA	28	
77	3	PAFZZ	PAOZZ	PAGZZ		D	.010	5310-00-637-9541	WASHER, LOCK: OIL PAN MTG MS35338-46 96906		EA	28	
77	4	XBFZZ	PAOBZ	PBGZZ				2815-00-628-0426	PAN ASSEMBLY, OIL 40-3019051 D 28265		EA	1	
77	5	PAFZZ	PAOZZ	KFGZZ			.040	5330-00-231-1632	GASKET: OIL PAN MTG (PART OF KIT NSN 5330-01-022-7993) 255191C 28265		EA	2	
77	6	PAFZZ	PAOZZ	KFGZZ			.030	5330-00-231-1632	SEAL, OIL: OIL PAN (PART OF KIT NSN 5330-01-022-7993) 255185A 28265		EA	2	
77	7	PAFZZ	PAOZZ	PAGZZ		D	.008	5310-00-268-6093	NUT, PLAIN, HEXAGON: ADAPTER MTG 28A 28265		EA	4	
77	8	PAFZZ	PAOZZ	PAGZZ		D	.010	5310-00-010-3320	WASHER, LOCK: ADAPTER MTG 615A 28265		EA	4	
77	9	XBFZZ	PAOZZ	PAGZZ				2815-00-012-2280	ADAPTER, OIL PAN 255179B 28265		EA	2	
77	10	PAFZZ	PAOBZ	PAGZZ		D	.008	2815-00-718-4830	STRAINER, OIL PUMP MTG 2851965 28265		EA	1	
77	11	PAFZZ	PAOZZ	PAGZZ		D	.008	5305-00-269-3211	SCREW, CAP, HEXAGON HEAD: PUMP MTG 2864A 28265		EA	2	
77	12	PAFZZ	PAOZZ	PAGZZ		D	.010	5310-00-637-9541	WASHER, LOCK: OIL PUMP MTG M35338-46 96906		EA	2	
77		PAFHH	PAOOO	PAGGG			.800	2815-00-615-8518	PUMP ASSEMBLY, OIL 40-302-5071D 28265		EA	1	
77	13	PAHZZ	PAOZZ	PAGZZ		D	.008	5306-00-916-6609	BOLT, MACHINE: COVER MTG 202536A 28265		EA	6	
77	14	PAHZZ	PAOZZ	XBGZZ		D	.008	5306-00-618-0710	SCREW, CAP, HEXAGON HEAD: COVER MTG 14875A 28265		EA	2	
77	15	PAHZZ	PAOZZ	PAOZZ		D	.018	5310-00-637-3027	WASHER, LOCK: COVER MTG OA18036F15 06840		EA	2	
77	16	XBHZZ	XB	XBGZZ					COVER, OIL PUMP 285184B 28365		EA	1	
77	17	PAHZZ	PAOZZ	XBGZZ				3020-00-938-5768	GEAR, DRIVE 2882630 28265		EA	1	
77	18	XAHZZ	XA	XAGZZ				2910-00-420-4902	PUMP ASSEMBLY, OIL 287311DS 28265		EA	1	
77	19	PAHZZ	XB	XBFZZ			.050	3020-01-112-2906	GEAR, IDLER 287314A 28265		EA	1	
77	20	PAHZZ	XB	XBGZZ			.050		GEAR, DRIVE SHAFT 285194A		EA	1	
77	21	PAHZZ	XB	XBGZZ			.050	3040-01-011-6347	SHAFT, DRIVE 2LG267B 28265		EA	1	
77	22	XBHZZ	XA	XBGZZ					BODY SHAFT ASSEMBLY 287315AS 28265		EA	1	

Current part is item (5,6) on diagram. Available at www.oshkoshequipment.com